HAL
open science

Description of an improved turbomachinery model to be developed in the cathare3 code for ASTRID power conversion system application

G. Mauger, F. Bentivoglio, N. Tauveron

To cite this version:

G. Mauger, F. Bentivoglio, N. Tauveron. Description of an improved turbomachinery model to be developed in the cathare3 code for ASTRID power conversion system application. NURETH 2015 - 16th International Topical Meeting on Nuclear Reactor Thermal Hydraulics, Aug 2015, Chicago, United States. cea-02509157

HAL Id: cea-02509157

https://cea.hal.science/cea-02509157v1

Submitted on 16 Mar 2020

HAL is a multi-disciplinary open access archive for the deposit and dissemination of scientific research documents, whether they are published or not. The documents may come from teaching and research institutions in France or abroad, or from public or private research centers.

L'archive ouverte pluridisciplinaire **HAL**, est destinée au dépôt et à la diffusion de documents scientifiques de niveau recherche, publiés ou non, émanant des établissements d'enseignement et de recherche français ou étrangers, des laboratoires publics ou privés.

DESCRIPTION OF AN IMPROVED TURBOMACHINERY MODEL TO BE DEVELOPED IN THE CATHARE 3 CODE FOR ASTRID POWER CONVERSION SYSTEM APPLICATION

G. Mauger[1], F. Bentivoglio[2] and N. Tauveron[2]
[1]: CEA, DEN/DANS/DM2S, F-91191 Gif-sur-Yvette, France
[2]: CEA, DRT/LITEN/DTBH, F-38054 Grenoble, France
gedeon.mauger@cea.fr; fabrice.bentivoglio@cea.fr; nicolas.tauveron@cea.fr

ABSTRACT

ASTRID (Advanced Sodium Technological Reactor for Industrial Demonstration) is the 1500 MWth French sodium-cooled fast reactor (SFR) developed by the CEA and its partners. It is designed to demonstrate the workability at an industrial scale of this Generation IV reactor type. For safety reasons, a gas power conversion system (PCS) based on a nitrogen Brayton cycle is envisaged for the tertiary circuit. The safety demonstration for this innovative option will require the calculation of a wide range of accidental situations. The thermo-hydraulic transient calculations will be performed using the CATHARE 3 code, that will have to accurately represent the primary (sodium), the secondary (sodium) and the tertiary (nitrogen) circuits.

In the operating range of pressure (from 1 to 180 bar) and temperature (from 20 to 550 °C) selected in the current stage of the project, nitrogen properties can be different from the perfect gas model currently implemented in the CATHARE 2 code. In addition, the turbomachinery module of the CATHARE 2 code uses the assumption of a perfect gas. Using this perfect gas model for safety studies would lead to debatable errors on both nominal state and transient calculations. For that reason, a real gas nitrogen model, based on REFPROP properties (NIST Reference Fluid Thermodynamic and Transport Properties Database), will be developed in the CATHARE 3 code, and an advanced model will be implemented for the turbomachinery module.

This paper presents in details the real gas model selected for this turbomachinery module. In the case of real gases, application of Buckingham's π theorem to performance characteristics of a turbomachine leads to consider additional non-dimensional variables than the four usually considered for perfect gases. But the complexity of the numerical treatment of performance maps implies to keep 2-D performance maps, with flow rate and rotational speed as input data. Reynolds number, heat capacity ratio and additional real gas variables will either be considered through correlations or neglected. Reduced flow rate and rotational speed will be evaluated with the gas speed of sound. Performance characteristics such as specific torque, head, pressure ratio and isentropic efficiency will be calculated with the gas entropy.

KEYWORDS
ASTRID, gas PCS, CATHARE 3, turbomachinery, real gas

1. INTRODUCTION

ASTRID is an industrial demonstrator of sodium-cooled fast reactor; one of the six concepts selected in the frame of GEN IV International Forum [1]. It is a 1500 MWth pool type reactor of about 600 MWe.

The vessel includes 3 primary pumps and 4 intermediate heat exchangers (IHX). Each IHX is part of a secondary loop which delivers a quarter of the core power to the power conversion system (PCS). The CEA and its partners studied innovative options in parallel with more classic one's during the conceptual design period from 2011 to 2015:

- A low void effect core (CFV) design to improve reactor safety behavior (prevention of core degradation and mitigation of its effects) in case of unprotected accidents [2];
- Redundancy and diversification of decay heat removal (DHR) systems for a reliable and passive heat removal of the reactor;
- An internal recuperator for corium to keep vessel integrity in case of fusion of the core;
- A gas PCS to eliminate the possibility of sodium/water reaction in the steam generators (SG) at the interface between secondary loops and the PCS, standing for the tertiary circuit [3].

This paper focuses on the gas PCS innovative option. In particular on the safety studies related to this gas PCS that will require the use of a reliable thermal-hydraulic code for transient calculations.

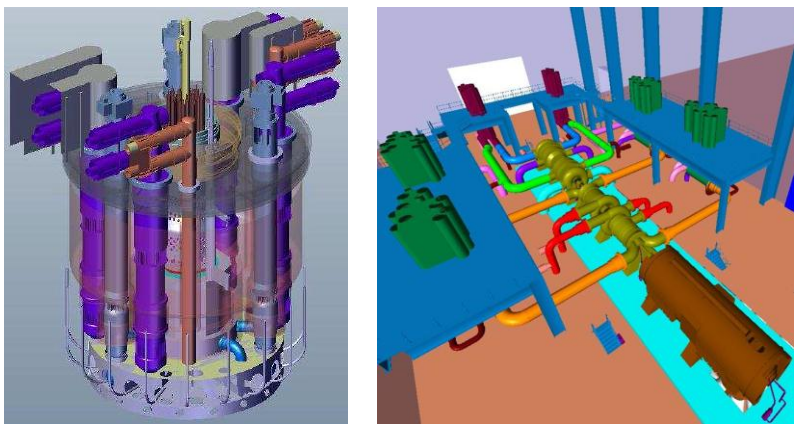

Figure 1. ASTRID pool (left) and gas PCS (right) layouts.

The paper first presents the ASTRID gas PCS innovative design. Then the CATHARE code which is used for nominal and transient calculations needed for ASTRID safety folder will be presented. This thermo-hydraulic code usually used for pressurized water reactor (PWR) modelling is also used for sodium (SFR) and gas fast reactors (GFR) applications [4]. Unlike Gas Fast Reactors studied in the past at CEA, in which helium was usually chosen as a coolant fluid, the ASTRID gas PCS working fluid is nitrogen at 180 bars. While helium can be considered as a perfect gas, pressurized nitrogen cannot and all CATHARE gas models based on perfect gas assumption are no more correct. Ongoing developments will enable the use of nitrogen with real gas properties. However some particular operators of the code such as turbomachines, valves and breaks (critical flow) need improved models compatible with real gas assumption. This new turbomachinery model which is detailed in the last section will be implemented in the CATHARE 3 code.

2. ASTRID GAS POWER CONVERSION SYSTEM

An innovative gas PCS, based on Brayton cycle, is studied for ASTRID in order to eliminate the possibility of sodium/water reaction that could occur using steam generators present in traditional steam/water PCS based on Rankine cycle. In the current design presented Figure 2, there are two independent PCS each one linked to two secondary loops through sodium gas heat exchangers (SGHE) and that convert half of the core power into electricity.

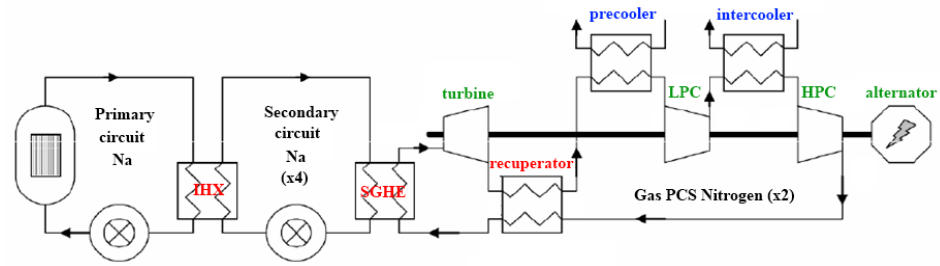

Figure 2. Diagram of ASTRID circuits with a gas PCS.

The main nominal features of ASTRID gas PCS are provided Figure 3 [5]. The nitrogen used as a working fluid powers a shaft through a turbine, which power enables to drive a low pressure compressor (LPC), a high pressure compressor (HPC) and an alternator. The heat source of the cycle comes from SGHE secondary sodium at 530°C. Then, nitrogen at high-pressure and high-temperature expands down in the turbine producing a shaft work. To increase cycle efficiency a recuperator preheats the gas before the inlet of the SGHE using power taken at the outlet of the turbine. Then nitrogen is cooled in a precooler before the LPC brings it to higher pressure (110 bars) consuming shaft work. A second cooling stage is performed in an intercooler and finally the HPC brings nitrogen to its high pressure level (180 bars). The shaft work excess is transformed into electricity by an alternator. The final efficiency of the cycle is about 37.5%, using realistic isentropic efficiency values for both compressors (91%) and turbine (94%), which is slightly lower than the traditional steam/water Rankine cycle which is about 42%.

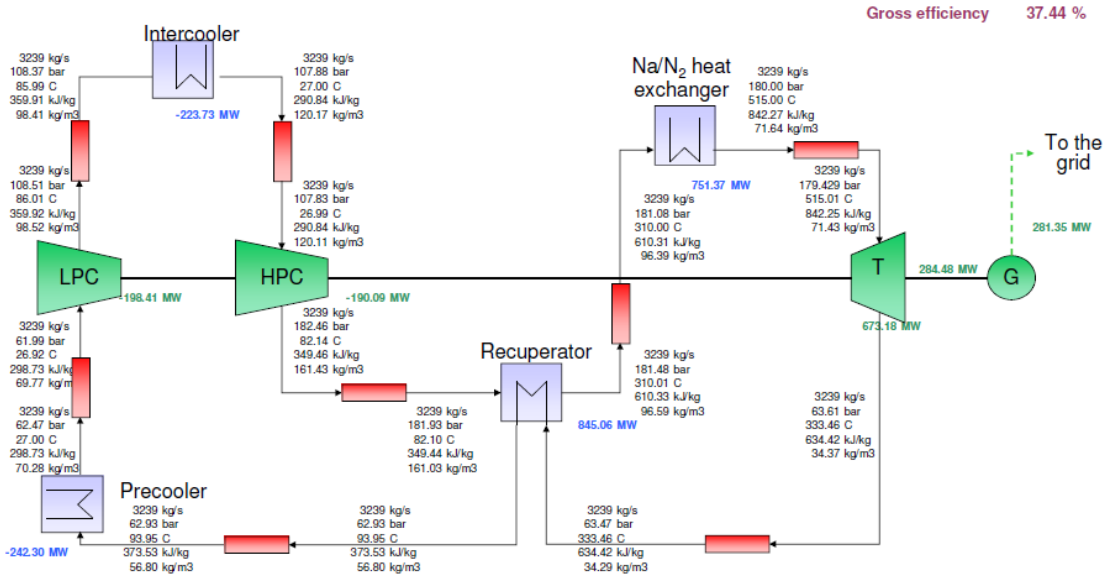

Figure 3. Heat balance diagram of one of the two ASTRID gas PCS.

In order to control the reactor during transients some other main components of the gas PCS are still investigated. To prevent shaft over speed when the alternator is disconnected from the grid, a turbine by-pass line is studied. It allows reducing the gas flow in the turbines while increasing the one in the compressors as a result of a shaft speed reduction. In addition, the control of the power extracted by the SGHE from the secondary circuits could be made by a recuperator by-pass line. A nitrogen service

system (NSS) will be used to manage the nitrogen inventory during slow transients. It is designed regarding transients of normal start-up and shut-down.

3. CATHARE CODE FOR GAS APPLICATIONS

CATHARE 2 is the French system code used for safety analysis. First developed for pressurized water reactors in the 80's, it has been extended to gas applications for 15 years [4-6]. Many developments have been made to represent all kinds of possible Brayton cycles with a turbomachinery:

- Specific fluid (named HIGHXNC) and closure laws to carry high fraction of non-condensable gas;
- Option to take into account an non-condensable gas heat capacity depending on the temperature;
- New mixture laws for helium, nitrogen and oxygen;
- Specific numerical method (second-order central difference) for gas heat exchangers with high temperature gradients;
- An implicit link to represent reversible-flow breaks between two different circuits;
- A turbomachinery module developed from the CATHARE 2 pump module to describe either a compressor or a turbine that can be coupled to a shaft and an alternator.

The behavior of the code has been validated on four real loops: EVOI [7], EVOII [8], PBMM [9] and HEFUS [10]. A wide range of transients has been tested on these experimental installations and compared to the code: start-up, load following, loss of load, loss of flow and by-pass valve transients. It has demonstrated the ability of the code to accurately represent the dynamic behavior of Brayton cycles in particular the turbomachinery behavior. As a result the CATHARE 2 code has been used to carry out transient analysis on several gas reactor concepts: VHTR [11-12], GFR2400 indirect cycle [13-14], GFR2400 indirect coupled cycle [15], ALLEGRO indirect cycle [16-17], ALLEGRO indirect coupled cycle [18] and current ASTRID gas PCS [19]. These calculations have also been validated towards others codes as part of PCRD Europeans projects as GFR-STREP [20] or GOFASTR [10-13].

3.1. Uncertainties of the CATHARE 2 Perfect Gas Model

The current CATHARE 2 calculations for the gas PCS of ASTRID lead to a specific uncertainty related to the use of the perfect gas model. Actually the working fluid for ASTRID gas PCS is high-pressurized nitrogen (180 bars) which properties can no more be modelled using perfect gas model. Table I provides the average difference between CATHARE 2 nitrogen properties and the NIST Reference Fluid Thermodynamic and Transport Properties Database (REFPROP) [21]. This gap is insignificant for low pressure but as the pressure rises it becomes more and more significant. Moreover this average gap conceals the gap inequality towards temperature presented Figure 4 for the heat capacity. The maximal uncertainty is reached for high pressure and low temperature: 8% for the density, 30% for the heat capacity, 52% for the conductivity and 34% for the viscosity. Such an approximation on fluid properties cannot be accepted in the framework of safety studies transient calculations. As a result, a real gas model is being developed is the CATHARE 3 code.

Table I. CATHARE 2 / REFPROP comparison of nitrogen properties against pressure (average gap in the range between 20 and 550°C).

Pressure (bar)	Density	Heat capacity	Conductivity	Viscosity
1	0.04%	0.06%	2.8%	3.9%
70	2.5%	4%	7.5%	7.7%
110	4%	6%	11.6%	10%
180	7%	8.8%	20%	15%

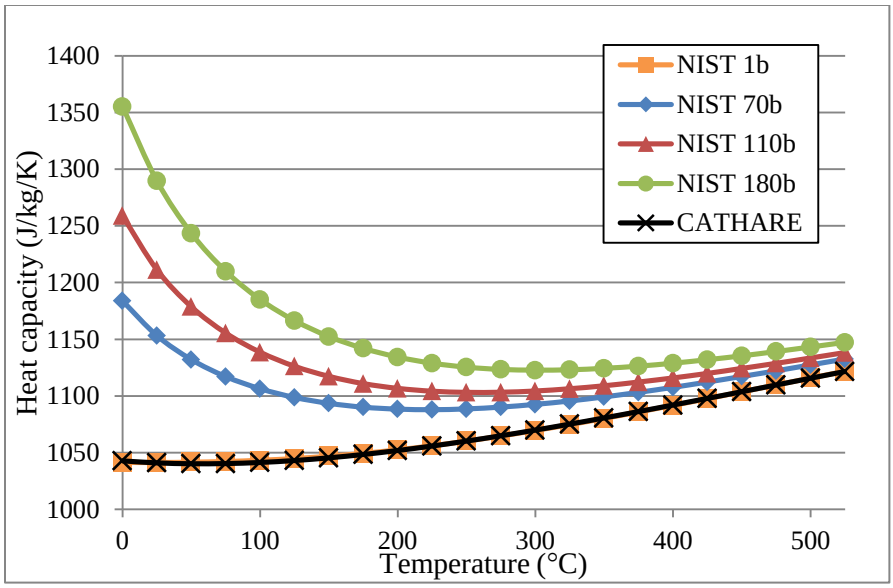

Figure 4. CATHARE 2 / REFPROP comparison of nitrogen heat capacity against pressure and temperature.

3.2. Development of the Real Gas Model in the CATHARE 3 Code

The CATHARE 3 code is being developed to expand CATHARE 2 ability of modelling nuclear reactors [22]. Its major feature is the possibility to choose field number from one (pure monophasic) to four: two continuous fields (liquid and vapor) and two disperse fields (droplets and bubbles). In addition, CATHARE 3 can use the Equation Of State (EOS) component which enables the calculation of gas properties from several libraries especially REFPROP ones. Using EOS, gas will no longer be considered as a non-condensable gas carried out by the HIGHXNC fluid but will be considered as a standard CATHARE 3 fluid with the same closure laws as HIGHXNC. The gas model will no more be a perfect gas model but a real gas model coming from REFPROP; that will remove the uncertainty we have using CATHARE 2 with a perfect gas model. Moreover, new methods are developed in EOS to access speed of sound, entropy, heat capacity and viscosity from REFPROP real gas tables. As usual EOS computation methods take pressure/temperature axis or pressure/enthalpy axis to compute other variables, the new turbomachinery model needs EOS to compute enthalpy from a pressure/entropy axis.

4. THEORETICAL APPROACH OF THE NEW TURBOMACHINERY MODEL

The current perfect gas turbomachinery model of CATHARE is no longer consistent with the new real gas model presented in the previous section. In order to validate the new turbomachinery model, a theoretical approach has been carried out from a classic non-dimensional representation.

4.1. State-of-the-Art: Non-dimensional Representation of a Turbomachinery for a Perfect Gas

Application of Buckingham's π theorem to turbomachine performance equations enables the reduction of representative variables leading to a simpler modelling of a turbomachinery. Assuming that the fluid is a perfect gas, it requires ten independent representative parameters to fully describe a turbomachine [23]. On the one hand there are machine geometric and kinematic variables and on the other hand fluid inlet conditions and properties as presented Table II.

Table II. Turbomachinery representative variables for a perfect gas.

Fluid	Inlet conditions	Mass flow rate ($\dot{m}$) Inlet pressure (P_{in}) Inlet temperature (T_{in})
	Properties	Specific gas constant (r) Specific heat capacity ratio (γ) Viscosity (μ)
Machine	Kinematic	Rotational speed (ω)
	Geometric	Diameter (D) Height of the blade (l_1) Chord length (l_2)

As this set of variables fully describes a turbomachine for its normal operating range, any performance characteristic *X* of the machine ($\mathrm{X} = \mathrm{P}_{out}, \eta, H, t$) can be written as follow:

$$\mathrm{X} = f(\dot{m}, P_{in}, T_{in}, r, \gamma, \mu, \omega, D, l_1, l_2) \tag{1}$$

Buckingham's π theorem indicates that for an equation of *n* variables (in this case *n* equals to eleven) and *m* fundamental quantities (in this case there are mass, length, time and temperature), this equation can be expressed as *(n-m)* non-dimensional numbers also named π numbers. Concretely, a group of *m* variables (P_{in}, T_{in}, r, D) which includes all fundamental quantities is selected from the *n* variables. Then, a non-dimensional equation is written for each remaining variable $(\mathrm{X}, \dot{m}, \gamma, \mu, \omega, l_1, l_2)$ as a combination of $(P_{in})^w (T_{in})^x (r)^y (D)^z$. Finally seven π numbers can be written as follow:

$$\pi_1 = X(P_{in})^w (T_{in})^x (r)^y (D)^z = \frac{P_{out}}{P_{in}} (= \Pi), \eta, \frac{H}{rT_{in}}, \frac{t}{rT_{in} \times D^3}$$

$$\pi_2 = \dot{m}(P_{in})^{-1}(T_{in})^{\frac{1}{2}}(r)^{\frac{1}{2}}(D)^{-2} = \frac{\dot{m}\sqrt{rT_{in}}}{P_{in} \times D^2} \qquad \pi_3 = \gamma(P_{in})^0(T_{in})^0(r)^0(D)^0 = \gamma$$

$$\pi_4 = \mu(P_{in})^{-1}(T_{in})^{\frac{1}{2}}(r)^{\frac{1}{2}}(D)^{-1} = \frac{\mu\sqrt{rT_{in}}}{P_{in} \times D} \qquad \pi_5 = \omega(P_{in})^0(T_{in})^{-\frac{1}{2}}(r)^{-\frac{1}{2}}(D)^1 = \frac{\omega \times D}{\sqrt{rT_{in}}}$$

$$\pi_6 = l_1(P_{in})^0(T_{in})^0(r)^0(D)^{-1} = \frac{l_1}{D} \qquad \pi_7 = l_2(P_{in})^0(T_{in})^0(r)^0(D)^{-1} = \frac{l_2}{D}$$

These π numbers can be combined together as allowed by the theorem. It enables to establish widely used numbers such as axial Mach number, Reynolds number and tangential Mach number:

$$\pi'_2 = \pi_2\sqrt{\pi_3} = \frac{\dot{m}\sqrt{\gamma r T_{in}}}{P_{in} \times D^2} = M_a \qquad \pi'_4 = \frac{\pi_2}{\pi_4} = \frac{\dot{m}}{\mu \times D} = Re \qquad \pi'_5 = \frac{\pi_5}{\sqrt{\pi_3}} = \frac{\omega \times D}{\sqrt{\gamma r T_{in}}} = M_\theta$$

By this analysis, non-dimensional performance characteristics of a turbomachine can be written as follow:

$$\frac{P_{out}}{P_{in}} (= \Pi), \eta, \frac{H}{\gamma r T_{in}}, \frac{t}{\gamma r T_{in} \times D^3} = f\left(M_a, \gamma, Re, M_\theta, \frac{l_1}{D}, \frac{l_2}{D}\right) \tag{2}$$

For practical reasons some hypotheses are made in the perfect gas turbomachinery model of CATHARE:

- Geometric characteristics of the machine are considered to be constant;
- Axial Mach number is written as a function of volumetric flow rate and temperature using the perfect gas law;
- Specific gas constant variation is optional and only used in the case of gas mixture [24];
- Reynolds number variation is optional and done thanks to Wiesner correlation [25];
- Specific heat capacity ratio variation is optional and done thanks to Roberts correlations [26].

As a result, for the current perfect gas turbomachinery model of the CATHARE code Equation (2) gives:

$$\Pi, \eta, \frac{H}{T_{in}}, \frac{t}{T_{in}} = f\left(\frac{\dot{m}/\rho_{in}}{\sqrt{T_{in}}}, \frac{\omega}{\sqrt{T_{in}}}\right) \tag{3}$$

4.2. Extension of the Non-dimensional Representation of a Turbomachinery for a Real Gas

The set of representative parameters of turbomachine performance equations must be reassessed taking into account real gas properties. Machine variables (ω, D, l_1, l_2) are not affected by this new hypothesis. Because inlet temperature and specific gas constant are the only variables which involve temperature in the perfect gas analysis, they were always combined together. For the real gas analysis it has been decided to replace $\gamma r T_{in}$, which is proportional to the square of velocity, by the genuine inlet speed of sound c_{in}. As a real gas model is considered, the thermodynamic state of the fluid is no longer characterized by two variables. For instance, if a Van der Waals model is considered, two additional variables are needed to describe the fluid: a cohesion pressure coefficient and an excluded volume coefficient:

$$(P + a\rho^2)(1 - b\rho) = \rho r T \tag{4}$$

In this situation, any performance characteristic of the machine can be written as follow:

$$f(X, \dot{m}, P_{in}, c_{in}, a, b, \gamma, \mu, \omega, D, l_1, l_2) = 0 \tag{5}$$

Now, fundamental quantities are mass, length and time; temperature effects only being considered through the inlet speed of sound. As before, a non-dimensional equation is written for each remaining variable $(X, \dot{m}, a, b, \gamma, \mu, \omega, l_1, l_2)$ as a combination of $(P_{in})^x (c_{in})^y (D)^z$. Finally nine π numbers are built and, for a Van der Waals gas model, non-dimensional performance characteristics of a turbomachinery can be written as follow:

$$\frac{P_{out}}{P_{in}} (= \Pi), \eta, \frac{H}{{c_{in}}^2}, \frac{t}{{c_{in}}^2 \times D^3} = f\left(\frac{\dot{m} \times c_{in}}{P_{in} \times D^2}, \frac{a \times P_{in}}{{c_{in}}^4}, \frac{b \times P_{in}}{{c_{in}}^2}, \gamma, Re, \frac{\omega \times D}{c_{in}}, \frac{l_1}{D}, \frac{l_2}{D}\right) \tag{6}$$

As for the perfect gas turbomachinery model, some hypotheses need to be done. The current treatment of 2-D (flow rate and rotational speed) performance maps is already numerically complex so it is not worth considering additional variables. Another way consists in taking into account new variables through correlations as for Reynolds number and specific heat capacity ratio. With this option it is assumed that a real gas model (Van der Waals, Redlich-Kwong, Berthelot, etc.) need to be chosen. So initially, real gas additional variables will not be considered at all. The validation plan should be imagined to ensure this assumption. The way to consider the new set of variables is presented Table III. Finally, for the standard real gas turbomachinery model of the CATHARE 3 code Equation (6) gives:

$$\Pi, \eta, \frac{H}{{c_{in}}^2}, \frac{t}{{c_{in}}^2} = f\left(\frac{\dot{m} \times c_{in}}{P_{in}}, \frac{\omega}{c_{in}}\right) \tag{7}$$

Table III. Variable consideration in the real gas turbomachinery model.

Variable	Significance	Consideration
$\frac{\dot{m} \times c_{in}}{P_{in}}$	compulsory	performance maps input data
$\frac{\omega}{c_{in}}$		
Re	medium	optional correlations [25-26]
γ		
$\frac{l_1}{D}, \frac{l_2}{D}$	neglected	none
$\frac{a \times P_{in}}{{c_{in}}^4}, \frac{b \times P_{in}}{{c_{in}}^2}$, etc.		

5. REAL GAS TURBOMACHINERY MODEL

Both CATHARE turbomachinery models compute head and specific torque from performance maps depending on both reduced rotational speed (tangential Mach number) and reduced flow rate (axial Mach number). The head source term is affected to the momentum equation written at the machine vector point (Figure 5). It influences the pressure difference between the two neighboring scalar points. The specific torque is affected to the energy equation written at the scalar point downstream the current gas flow.

Performance maps are given as input data considering a non-dimensional approach. They consist of a couple of 2-D performance functions which are either reduced head and reduced specific torque or reduced pressure ratio and reduced isentropic efficiency. They are given as a set of point (Figure 5). Each point of the map corresponds to a given couple of reduced rotational speed and reduced flow rate. This model assumes a succession of stationary states. A bi-harmonic spline interpolation method computes the desired reduced performance characteristic from any couple of reduced rotational speed and flow rate.

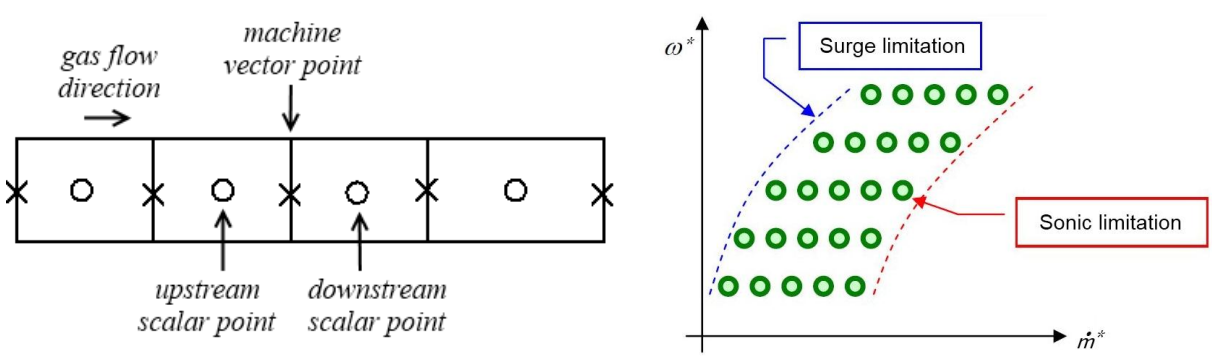

Figure 5. Diagrams of CATHARE mesh (left) and compressor performance map (right).

These generalities are true for both perfect gas and real gas turbomachinery models. If head and specific torque are needed for the calculation of the CATHARE momentum and energy equations, pressure ratio and isentropic efficiency are much more fitted to the turbomachinery field. Especially they enable the calculation of the gas entropy variation through the machine and they are the one usually used in correlations [25-26]. As a result of the following differences between the current perfect gas and the new real gas turbomachinery model:

- New set of generalized variables consistent with real gas model, presented in Equation (7);
- New method to compute performance characteristics consistent with real gas model, presented later in this section;
- New computation structure in which the four performance characteristics will be computed whatever the performance maps given by the user, presented in Figure 6;
- Computation of the outlet entropy to ensure the second law of thermodynamics, presented later in this section.

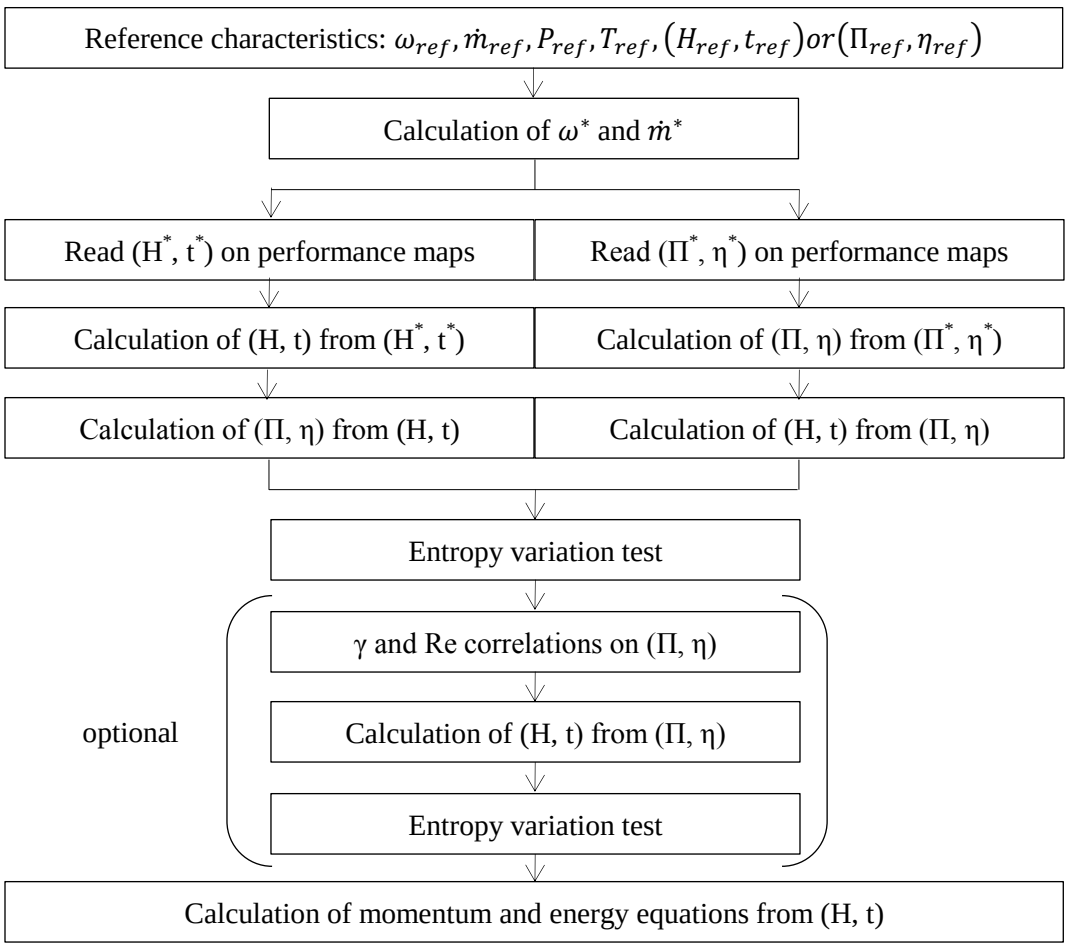

Figure 6. Overall computation structure of the new real gas turbomachinery model.

5.1. Calculation of Reduced Rotational Speed and Flow Rate

For the calculation of reduced rotational speed and flow rate, reference characteristics must be given as input data. It concerns reference rotational speed, mass flow rate, inlet pressure and inlet temperature. Reference inlet speed of sound is computed from REFPROP tables with reference pressure and

temperature. Reduced rotational speed and flow rate are calculated as the ratio between generalized, see Equation (7), and reference generalized values.

The reduced rotational speed is given by:

$$\omega^* = \frac{\omega/c_{in}}{(\omega/c)_{ref}} \tag{8}$$

And the reduced flow rate is given by:

$$\dot{m}^* = \frac{\dot{m}c_{in}/P_{in}}{\left(\dot{m}c/P\right)_{ref}} \tag{9}$$

5.2. Calculation with Head and Specific Torque Input Data

When head and specific torque performance maps are given as input data the current bi-harmonic spline interpolation method enables to compute the reduced head $H^*(\dot{m}^*, \omega^*)$ and the reduced specific torque $t^*(\dot{m}^*, \omega^*)$ from reduced flow rate and rotational speed. To keep similitude properties of the non-dimensional representation, the head and the specific torque expressions must be divided by the square of the inlet speed of sound as presented in Equation (7).

Thus, in this case head and the specific torque are given by:

$$H = H^* \times {c_{in}}^2 \times \left(\frac{H}{c^2}\right)_{ref} \tag{10}$$

$$t = t^* \times {c_{in}}^2 \times \left(\frac{t}{c^2}\right)_{ref} \tag{11}$$

Then pressure ratio and isentropic efficiency are computed from these head and specific torque as:

$$\Pi = 1 + \frac{H}{P_{in}/\rho_{in}} \tag{12}$$

$$\eta_t = \frac{1}{\eta_c} = \frac{\Delta h}{\Delta h_{is}} = \frac{\rho_{in} t\omega/\dot{m}}{h(\Pi \mathrm{P}_{in}, s_{in}) - h_{in}} \tag{13}$$

Note that the new pressure/entropy axis developed in EOS must be used to compute the isentropic enthalpy at outlet pressure.

5.3. Calculation with Pressure Ratio and Isentropic Efficiency Input Data

When pressure ratio and isentropic efficiency performance maps are given as input data the current bi-harmonic spline interpolation method enables to compute the reduced pressure ratio $\Pi^*(\dot{m}^*, \omega^*)$ and the reduced isentropic efficiency $\eta^*(\dot{m}^*, \omega^*)$. As they are still non-dimensional they are only given by:

$$\Pi = \Pi^* \times \Pi_{ref} \tag{14}$$

$$\eta = \eta^* \times \eta_{ref} \tag{15}$$

Then head and specific torque are computed from these pressure ratio and isentropic efficiency as:

$$H = {}^{P_{in}}/_{\rho_{in}} (\Pi - 1) \tag{16}$$

$$t = \frac{\dot{m}\Delta h}{\rho_{in}\omega} = \frac{\dot{m}}{\rho_{in}\omega}\left(\eta_t \; or \; \frac{1}{\eta_c}\right)\Delta h_{is} = \frac{\dot{m}}{\rho_{in}\omega}\left(\eta_t \; or \; \frac{1}{\eta_c}\right)[h(\Pi \mathrm{P}_{in}, s_{in}) - h_{in}] \tag{17}$$

As above, the new pressure/entropy axis developed in EOS must be used to compute the isentropic enthalpy at outlet pressure.

5.4. Entropy Variation Test

The current CATHARE turbomachinery model raises an issue during some dissipative trips, especially for turbines at low rotational speeds. In such a regime, the turbine can perform either as a pure dissipative machine (quadrant IV of Table IV) or as a compressor by carrying energy from the shaft to the fluid (quadrant I of Table IV). All this regimes are determined by a specific set of head and specific torque signs as presented Table IV. To obey the second law of thermodynamics, system's entropy must not decrease. This means that the machine must work in quadrants I, III or IV. But, if the original set of working points described in the performance maps ensures this principle, interpolation methods can compute working points which belong to quadrant II because of some fluctuations. This is especially true for low rotational speeds as head and specific torque are closed to zero. This violation of the second law of thermodynamics leads to very stable and physically impossible regime in which the machine supplies energy to both fluid and shaft.

Table IV. Relation between head and specific torque quadrants and machine regimes.

Quadrant	Head	Specific torque	Regime	Δs
I	positive	positive	compressor	positive
II	positive	negative	physically impossible	negative
III	negative	negative	turbine	positive
IV	negative	positive	pure dissipative	positive

Thanks to the new real gas turbomachinery model, a calculation of the entropy variation can be done as part of the performance characteristics calculation. The test is given by:

$$\mathrm{s}_{out} = s(\mathrm{P}_{out}, h_{out}) \geq \mathrm{s}_{in} \tag{18}$$

With outlet pressure and enthalpy given by:

$$\mathrm{P}_{out} = \Pi \mathrm{P}_{in} \tag{19}$$

$$h_{out} = h_{in} + \frac{\rho_{in} t\omega}{\dot{m}} \tag{20}$$

This test enables the detection of the second law of thermodynamics violation while performing the performance characteristics calculation. First use as a simple user indicator of a thermodynamic incoherency, in a second step it allows the internal resolution of this issue.

6. CONCLUSION AND PROSPECTS

A gas PCS is investigated for the French sodium-cooled demonstrator ASTRID for a safety reason. Its modeling raises some issues as the nitrogen used as a working fluid in the Brayton cycle can no longer be considered as a perfect gas. The CATHARE 3 code used for transient analysis precisely makes this assumption as a result of a degraded nominal operating point as well as uncertain transient behaviors. To solve this problem a real gas model has been developed from the NIST REFPROP database. Thanks to this development, a new turbomachinery model using real gas properties has been explored. Performance characteristics of the machine can be computed from the original power equation by means of enthalpy computation from a pressure/entropy axis. To prevent violation of the second law of thermodynamics an entropy variation test is going to be implemented. However this detection is not sufficient and a method would have to be imagined to solve once and for all this issue.

An important work would have to be carried out on the validation of this new turbomachinery model. As the real gas model and the turbomachinery model are linked, the stress is put on dealing separately with the two effects. First the turbomachinery model will be validated on helium machines [8-10]. As helium can be considered as a perfect gas, REFPROP properties will be close to current helium thermodynamic properties and so the new turbomachinery model can be validated for perfect gas applications. The second step of validation is about real gas applications. The modelling of a correct nominal operating point of ASTRID gas PCS is the first stage. Then hypotheses made in the non-dimensional representation of a turbomachinery for a real gas section could be check through CFD calculations. Keeping the reduced rotational speed and flow rates constants variations of pressure, Reynolds number, specific heat capacity ratio or real gas properties could be performed. Then the transient behavior of the turbomachinery model need to be validated on a new experimental facility, especially for fast depressurized transients such as breaks and turbomachinery shutdown on inertia in which dissipative trips may occur. For that validation, the design of an experimental facility is presently considered by the CEA.

NOMENCLATURE

Latin letters

a	Cohesion pressure (Van der Waals gas model)	(Pa. $(kg.m^{-3})^{-2}$)
b	Excluded volume (Van der Waals gas model)	$((kg.m^{-3})^{-1})$
c	Speed of sound	$(m.s^{-1})$
D	Diameter of turbomachine	(m)
h	Enthalpy	$(J.kg^{-1})$
H	Head	$(J.kg^{-1})$
l_1	Height of the blade	(m)
l_2	Chord length	(m)
$\dot{m}$	Mass flow rate	$(kg.s^{-1})$
M	Mach number	(-)
P	Pressure	(Pa)
r	Specific gas constant	$(J.kg^{-1}.K^{-1})$

Re	Reynolds number	(-)
s	Entropy	($J.kg^{-1}.K^{-1}$)
t	Specific hydraulic torque	($m^5.s^{-2}$)
T	Temperature	(K)

Greek letters

γ	Specific heat capacity ratio	(-)
η	Isentropic efficiency	(-)
μ	Viscosity	(Pa.s)
π	Buckingham non-dimensional number	(-)
Π	Compression ratio (greater than one for a compressor and lower than one for a turbine)	(-)
ρ	Density	($kg.m^{-3}$)
ω	Rotational speed	($rad.s^{-1}$)

Subscripts

a	axial
c	compressor
in	inlet
is	isentropic
out	outlet
ref	reference
t	turbine
θ	tangential

Superscripts

*	Reduced value = current value divided by reference value

ACKNOWLEDGMENTS

The authors would like to thank the sodium fast reactor R&D project and the Gen IV program of Nuclear Energy Division of CEA that have supported this work.

REFERENCES

1. P. Le Coz & al., "The ASTRID Project: Status and Future Prospects," *Proceedings of 2013 International Conference on Fast Reactors and Related Fuel Cycles: Safe Technologies and Sustainable Scenarios (FR-13)*, Paris, France, March 4–7 (2013).
2. M.S. Chenaud & al., "Status of the ASTRID core at the end of the pre-conceptual design phase 1," *Nuclear Engineering and Technology,* 45(6), pp. 721 (2013).
3. L. Cachon & al., "Innovative power conversion system for the French SFR prototype, ASTRID," *Proceedings of 2012 International Congress on Advances in Nuclear Power Plants (ICAPP-12)*, Chicago, USA, June 24–28 (2012).
4. G. Geffraye & al., "CATHARE 2 V2.5_2 : a Single Version for Various Applications," *Proceedings of the 13th International Topical Meeting on Nuclear Reactor Thermal-Hydraulics (NURETH-13)*, Kanazawa City, Japan, September 27–October 2 (2009).

5. G. Laffont, “ASTRID power conversion system based on steam and gas options,” *Proceedings of 2013 International Congress on Advances in Nuclear Power Plants (ICAPP-13)*, Jeju Island, Korea, April 14–18 (2013).
6. O. Widlund & al., “Overview of Gas Cooled Reactor applications with CATHARE,” *Proceedings of the 11th International Topical Meeting on Nuclear Reactor Thermal-Hydraulics (NURETH-11),* Paper 484, Avignon, France, October 2-6 (2005).
7. F. Bentivoglio & al., “Validation of the CATHARE 2 code against experimental from Brayton cycle plants,” *Nuclear Engineering and Design*, 238, pp. 3145-3159 (2008).
8. F. Bentivoglio & N. Tauveron, “Validation of the CATHARE 2 code against Oberhausen II data,” *Nuclear Technology*, Vol.164, October (2008).
9. O. Widlund & al., “Comparison of the thermal-fluid analysis codes CATHARE and FLOWNEX with experimental data from pebble bed micro model,” *4th International Conference on Heat Transfer, Fluid Mechanics and Thermodynamics,* Cairo, Egypt (2005).
10. M. Polidori & al., “HE-FUS3 benchmark result,” FP7 GoFastR DEL D1.5-6 (2012).
11. F. Bentivoglio & al., “MANTA / CATHARE: benchmark on VHTR ANTARES calculations,” *CEA/DER/SSTH/LDAS*, DO 62 (2005).
12. F. Bertrand & al., “Safety study of the coupling of a VHTR with a hydrogen production plant,” *Nuclear Engineering and Design*, Paper 241, pp. 2580-2596 (2011).
13. K. Mikityuk & al., “GFR Transient analysis,” GoFastR DEL 1.3-6 (2012).
14. F. Bentivoglio & al., “CATHARE simulation of transients for the 2400MW Gas Fast Reactor concept,” *Proceedings of 2009 International Congress on Advances in Nuclear Power Plants (ICAPP-09)*, Tokyo, Japan, Paper 9378 (2009).
15. N. Tauveron & F. Bentivoglio, “Preliminary design and study of the indirect coupled cycle: An innovative option for Gas Fast Reactor,” *Nuclear Engineering and Design*, 247, pp. 76-87 (2012).
16. I. Dor & al., “ALLEGRO project – DHR Investigation with the CATHARE Code,” *Proceedings of the 13th International Topical Meeting on Nuclear Reactor Thermal-Hydraulics (NURETH-13)*, Kanazawa City, Japan, September 27–October 2 (2009).
17. G. Mayer & F. Bentivoglio, “Preliminary study of the decay heat removal strategy for the gas demonstrator ALLEGRO,” *Nuclear Engineering and Design*, to be published (2015).
18. F. Bentivoglio & N. Tauveron, “Preliminary design and study of an innovative option for gas demonstrator ALLEGRO,” *Proceedings of the 15th International Topical Meeting on Nuclear Reactor Thermal-Hydraulics (NURETH-15)*, Pisa, Italy, May 12-17 (2013).
19. F. Bertrand & G. Mauger, “Transient analysis of the ASTRID demonstrator including a gas nitrogen power conversion system with the CATHARE 2 code,” *Proceedings of the 16th International Topical Meeting on Nuclear Reactor Thermal-Hydraulics (NURETH-16)*, Chicago, USA, August 30-September 4 (2015).
20. E. Bubelis & al, ‘A GFR benchmark: comparison of transient analysis codes based on the ETDR concept,” *Nuclear Energy*, 20, pp 37-51 (2008).
21. “Thermophysical Properties of Fluid Systems,” webbook.nist.gov/chemistry/fluid/ (2011).
22. P. Emonot & al., “CATHARE-3: a new system code for thermal-hydraulics in the context of the NEPTUNE project,” *Proceedings of the 13th International Topical Meeting on Nuclear Reactor Thermal-Hydraulics (NURETH-13)*, Kanazawa City, Japan, September 27–October 2 (2009).
23. B. Lakshminarayana, *Fluid Dynamics and Heat Transfert of Turbomachinery*, Chapter 2.4 Nondimensional Representation, Wiley-Interscience, Eastbourne, UK (1996).
24. N. Tauveron & al., “Study of nitrogen injection to enhance forced convection for gas fast reactors,” *Nuclear Engineering and Design*, 241(9), pp. 3787-3803 (2011).
25. F.J. Wiesner, “Practical Stage Performance Correlations for Centrifugal Compressors,” ASME Paper No. 60-HYD-17 March (1960).
26. S.K. Roberts, “Effects of fluid properties on the aerodynamic performance of turbomachine for semi-closed cycle gas turbine engines using O2/CO2 combustion,” PhD thesis, Ottawa-Carleton Institute for Mechanical and Aerospace Engineering (2001).