HAL
open science

Separation of amercium from a concentrated raffinate by liquid-liquid extraction hot tests in the ATALANTE facility

V. Vanel, M. Montuir, V. Pacary, C. Marie, M.J. Bollesteros, L. Corbin, V. Boyer-Deslys

To cite this version:

V. Vanel, M. Montuir, V. Pacary, C. Marie, M.J. Bollesteros, et al.. Separation of amercium from a concentrated raffinate by liquid-liquid extraction hot tests in the ATALANTE facility. GLOBAL2015, Sep 2015, Paris, France. cea-02491638

HAL Id: cea-02491638

https://cea.hal.science/cea-02491638v1

Submitted on 26 Feb 2020

HAL is a multi-disciplinary open access archive for the deposit and dissemination of scientific research documents, whether they are published or not. The documents may come from teaching and research institutions in France or abroad, or from public or private research centers.

L'archive ouverte pluridisciplinaire **HAL**, est destinée au dépôt et à la diffusion de documents scientifiques de niveau recherche, publiés ou non, émanant des établissements d'enseignement et de recherche français ou étrangers, des laboratoires publics ou privés.

Proceedings of Global 2015
September 20-24, 2015 - Paris (France)
Paper 5234

Separation of Americium from a Concentrated Raffinate by Liquid-Liquid Extraction : hot tests in the ATALANTE facility

V. Vanel, M. Montuir, V. Pacary, C. Marie, MJ. Bollesteros, L. Corbin, V. Boyer-Deslys
CEA Marcoule, Nuclear Energy Division, Radiochemistry and Processes Department
BP17171, Bagnols-sur-Cèze, F-30207, France
Tel: +33 4 66 39 78 66, Fax:+33 4 6679 63 25 , Email: vincent.vanel@cea.fr

Abstract – *Recycling americium (Am) alone from the spent fuel is an important option studied for the future nuclear cycle. Since 2008, a liquid-liquid extraction process called EXAm has been developed by the CEA to allow the recovery of Am alone from a PUREX or COEXTM raffinate (already cleared from U, Np and Pu). A mixture of DMDOHEMA (N,N'-dimethyl-N,N'-dioctyl-2-(2-(hexyloxy)ethyl)-malonamide) and HDEHP (di-2-ethylhexylphosphoric acid) in TPH is used as the solvent and the Am/Cm selectivity is improved using TEDGA (tetraethyldiglycolamide) as a selective complexing agent to maintain Cm and heavier lanthanides in the acidic aqueous phase (HNO3 5M). Americium is then stripped selectively from light lanthanides at low acidity (pH2.5-3) with a polyaminocarboxylic acid.*
Since 2011, in order to increase the compactness of this process and future plan associated, additional developments have been studied to adapt the EXAm process to a concentrated raffinate (addition of a TEDGA stripping step, pH in the Mo stripping step more difficult to control, development of a model in low acidic conditions). Following up first cold tests in G1 facility in 2011-2012, a test was carried out in April 2014 in the ATALANTE facility (C17 hot cells) on a surrogate feed solution with trace amounts of americium and curium. This C17 test aimed at consolidating the process flowsheet and ensuring performances achievement in terms of americium recovery and its decontamination towards curium and light lanthanides.
An americium recovery rate of 99.3% was obtained. Although the americium flow was not sufficiently decontaminated towards Cm and light lanthanides, several ways of improvement were identified. A simulation of this test was performed with the PAREX code and compared with experimental data, either in transitory situations or at the end of the test. The modelling of main elements was broadly validated.
Based on this work, a flowsheet is proposed for a hot test on a genuine PUREX raffinate scheduled in 2015 in CBP hot cells in ATALANTE facility. The recovery of several grams of americium is expected to produce some AmO2 pellets for irradiation experimentations.

I. INTRODUCTION

The EXAm process[1,2], developed to meet the requirements of the 2006 Waste Management Act, aims at recovering americium alone from a PUREX raffinate. An organic phase composed of two extractants, 0.6 M DMDOHEMA (N,N'-dimethyl-N,N'-dioctyl-hexyloxyethyl-malonamide) and 0.45 M HDEHP (di-2-ethylhexylphosphoric acid), is used to extract americium in high-acid conditions. It is then stripped selectively into a low acidic aqueous phase containing complexing agents. Figure 1 shows the different steps of the EXAm process.

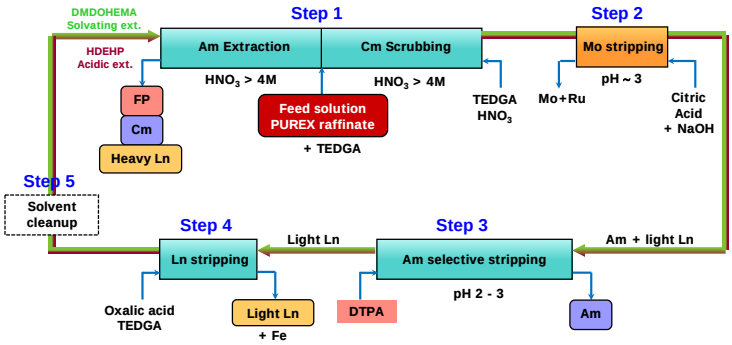

Fig. 1. EXAm flowsheet (principles)

Following first cold tests in G1 facility in 2011-2012, a test was carried out in April 2014 in the ATALANTE facility (C17 hot cells) on a surrogate feed solution with trace amounts of americium and curium. This C17 test aimed at consolidating the process flowsheet and ensuring performance achievement in terms of americium recovery and its curium and light lanthanide decontamination.

II. EXAm flowsheet for the hot test in C17

II.A. Feed solution composition

The feed solution was a surrogate representative of a triple concentrated PUREX raffinate with trace amounts of americium and curium. The following adjustments were made:

- the concentrations of neodymium and samarium were respectively increased proportionally to the concentrations of americium and curium in the PUREX raffinate to keep the same solvent loading.
- the concentration of iron was increased in order to observe the effect of iron contamination on the process.

The concentrations of main elements are listed in Table I.

TABLE I

Feed solution composition for the C17 hot test

Element	Concentration
HNO_3	8.1 M
Am	397 µg/L
Cm	205 µg/L
La	1.467 g/L
Ce	2.59 g/L
Pr	1.354 g/L
Nd	4.9 g/L
Sm	1.183 g/L
Eu	185 mg/L
Gd	210 mg/L
Y	552 mg/L
Fe	964 mg/L
Mo	2.229 g/L
Zr	2.469 g/L
Ru	1.705 g/L
Pd	2.313 g/L

II.B. Target performances

The EXAm process aims at recovering as much americium as possible with adequate curium and light lanthanide decontamination. The americium recovery rate should be over 99% at the “Am extraction” step and over 99.9% at the “Am stripping” step. Upstream processes need to have a decontamination factor DF(Am/Cm) over 500 and a mass percentage of light lanthanides (La, Ce, Pr, Nd) below 5%.

II.C. Suggested flowsheet

The flowsheet consisted of PMMA mixer-settler extractors where the aqueous and organic phases flow countercurrently[3]. Except for solvent treatment, the steps of the EXAm process were modelled and implemented in the PAREX code. Some descriptions of these models can be found in the literature[4,5,6]. There are not necessarily the most up-to-date models but the articles explain the main principles.

On the basis of the feed solution composition and the models, a flowsheet was simulated with the PAREX code in order to meet target performances (cf. figure 2).

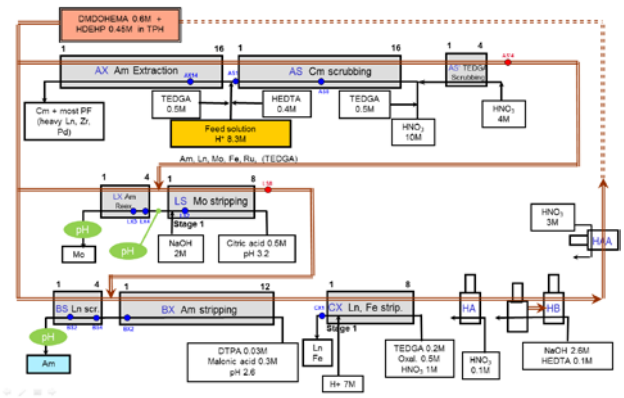

Fig. 2. EXAm flowsheet for the C17 hot test in ATALANTE

To avoid using a process with a high yield of americium but with a risk of poor decontamination factors due to imprecision, we have deliberately chosen to start the test with a less efficient process that would lead to an americium recovery rate around 5 or 10% less than the target[7]. Once the yield of the current flowsheet was estimated, the TEDGA flow rate was slowed down appropriately in the extraction step. The flowsheet was then improved in order to reach the target performances.

If necessary, during the test, the flowsheet was corrected based on analytical measurements, both of samples (Am, Cm, Ln, Zr, Mo, H+, Fe, etc.) and of on-line spectrophotometry[3] (Nd, blue spot on figure 2). At the end of the test, samples were analyzed to evaluate mass balances and performances reached and to acquire experimental data to better understand the behavior of the chemical elements.

III. Experimental results

The test took place in the C17 shielded chain (ATALANTE, Marcoule) from April 14th to 18th 2014, and lasted around 80 hours.

Experimental balances were evaluated at the end of the test first with average samples, and then with concentration profiles (see table II). The overall balances in all batteries were satisfactory for all the chemical elements except for curium and samarium, indicating a flowsheet close to equilibrium (cf. also figures 3 and 4). It was not possible to check the mass balance of Am with its concentration profiles. The balance in the "Mo stripping step" and in the "Am stripping step" (calculated from input/output experimental values for each battery regardless of the feed solution composition) suggests that the gap between concentration profiles and average samples is the same for all batteries.

TABLE II

Mass balances at the end of the test

Chemical element	Concentration profiles	Average samples
Am	71%	104%
Cm	-	45%
La	101%	98%
Ce	98%	102%
Pr	105%	93%
Nd	121%	110%
Sm	54%	71%
Eu	84%	91%
Gd	100%	109%
Y	110%	101%
Fe	-	102%
Mo	-	93%
Zr	101%	85%
Ru	83%	97%
Pd	72%	90%
TEDGA	91%	-

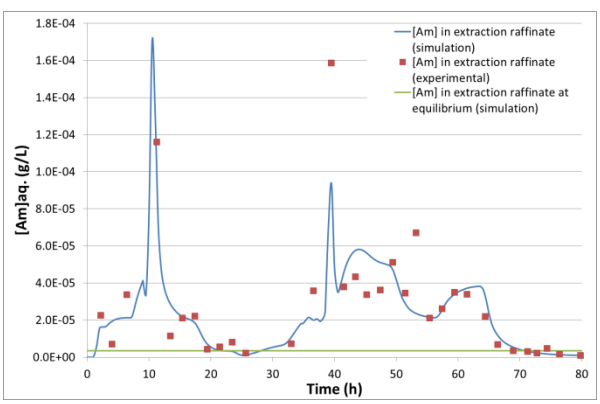

Fig. 3. simulation of the Am concentration in the extraction raffinate with the PAREX code during transitional regime vs. experimental values

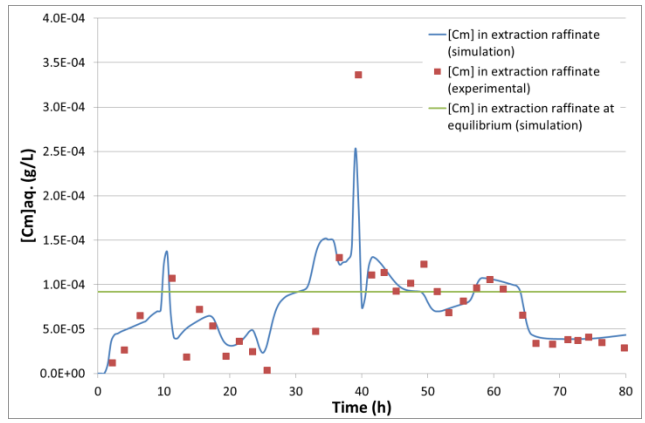

Fig. 4. simulation of the Cm concentration in the extraction raffinate with the PAREX code during transitional regime vs. experimental values

With the exception of the "Cm scrubbing" step, the hydrodynamic behavior of the batteries was generally satisfactory. The test performances are summarized in Table III.

TABLE III

Performances reached vs. target performances

Step (cf. figure 1)	Target performances	Performances reached
Step 1	**Am recovery>99%** DF(Am/Cm)≥500	**Am recovery~99.4%** DF(Am/Cm)~10-40(*)
Step 2	**$[Am]_{raffinate}$<0.1%** **$[Mo]_{outlet\ solvent}$<0.5%**	**$[Am]_{raffinate}$<0.01%** **$[Mo]_{outlet\ solvent}$<DL**
Step 3	**Am recovery>99.9% at this step** DF(Am/Nd)≥400	**Am recovery>99.87% at this step** DF(Am/Nd)~100

(*) not at equilibrium

The americium recovery rate at step 3 cannot be evaluated more accurately because of detection limits: in fact the target performance should have been achieved.

The simulation of hydroxylamine extraction, used as a buffering element in DTPA solution, was improved following these experimental results. With this new model, the flowsheet may be adjusted to meet an adequate DF(Am/Nd).

Apart from Cm and Sm not being at equilibrium, the simulation of concentration profiles at the end of the test is in good agreement with experimental measurements (cf. figures 5 and 6) given the balance uncertainties.

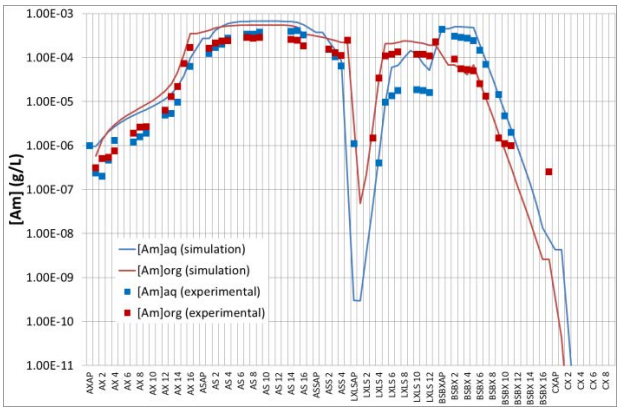

Fig. 5. concentration profile of Am at the end of the test vs. experimental values

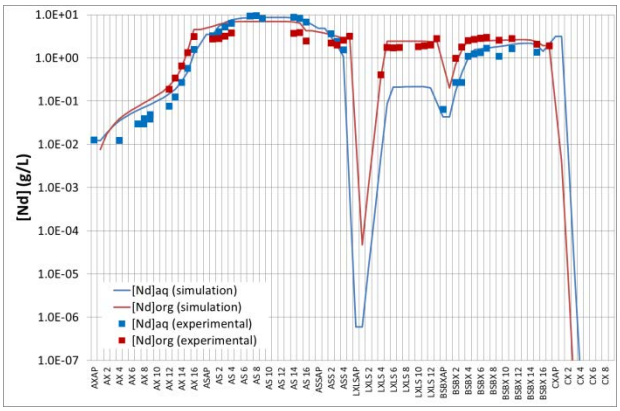

Fig. 6. concentration profile of Nd at the end of the test vs. experimental values

IV. CONCLUSIONS

An overall americium recovery rate of about 99.3% was obtained. Curium and light lanthanides (especially neodymium) in the americium production flow was not sufficiently removed (such a high americium recovery rate cannot lead to a good DF(Am/Cm)). Jointly achieving these two objectives is more difficult when using a concentrated feed solution. As well as improving the "Cm scrubbing" step hydrodynamics, some factors indicate the potential for a better decontamination during the next hot test in the CBP shielded line. There will be an Am / Cm ratio in the feed solution of about 10 at the CBP instead of only 2 at the C17 and a more responsive monitoring through spectrophotometry, unachievable with trace amounts of americium. However, if this decontamination objective becomes a priority, and if it is consistent with the amount of americium to recover during the test, a less constraining performance allowing americium loss of several % rather than 1% should mean a less sensitive flowsheet can be designed.

Experimental results from this test confirm a satisfactory simulation of the behavior of the main chemical elements, both during transitional regime and at the end of the test. The main malfunctions that occurred during the test were simulated with varying degrees of fidelity. Although results are in relatively good agreement with experiments, we should remain cautious about the representatively of the simulation and consolidate it with experimental results from the test at the CBP.

A flowsheet has been proposed for the test at the CBP planned for 2015. An americium recovery rate of almost 99% at an average rate of 50 mg/hour from 15 hours of operation is the target. For 65 hours of operation, about 2.7 grams of Am may be produced (compared to 3.8 grams originally contained in the feed solution). A flushing procedure has been proposed to recover americium contained in mixer-settlers (about 1.1 gram of americium for a flowsheet at equilibrium).

REFERENCES

1. C. Poinssot, D. Warin and C. Rostaing, "Recent achievements towards the recycling of minor actinides for the improvement of future nuclear fuel cycle", *ENC* (2009).
2. C. Rostaing, C. Poinssot, D. Warin, P. Baron and B. Lorrain, "Development and validation of the EXAm separation process for single Am recycling", *Procedia Chemistry*, Vol. 7 , p. 367 - 373 , Elsevier, (2012).
3. MJ. Bollesteros, JN. Calor, S. Costenoble, M. Montuir, V. Pacary, C. Sorel, F. Burdet, D. Espinoux, X. Hérès and C. Eysseric, "Implementation of americium separation from a PUREX raffinate", *Procedia Chemistry*, Vol. 7 , p. 178 - 183, Elsevier, (2012).
4. V. Pacary, F. Burdet and MT. Duchesne, "Experimental and modeling of extraction of lanthanides in system HNO_3-TEDGA-{DMDOHEMA-HDEHP}", *Procedia Chemistry*, Vol. 7 , p. 328 - 333, Elsevier, (2012).
5. V. Vanel, L. Berthon, J. Muller, M. Miguirditchian and F. Burdet, "Modelling of americium stripping in the EXAm process", *Procedia Chemistry*, Vol. 7 , p. 404 - 410, Elsevier, (2012).
6. V. Vanel, C. Marie, MT. Duchesne, X. Hérès, V. Pacary, L. Berthon, D. Rudloff, M. Bertrand, S. Watanabe, "Modelling and simulation of molybdenum extraction by ion-exchanger HDEHP and solvating extractant DMDOHEMA", ISEC conference (2014).
7. M. Montuir, V. Pacary, C. Sorel, P. Baron, MJ. Bollesteros, S. Costenoble, D. Espinoux, X. Hérès, C. Rostaing, "Sensitivity of americium and curium splitting flowsheet and running procedure", *Procedia Chemistry*, Vol. 7 , p. 275 - 281, Elsevier, (2012).